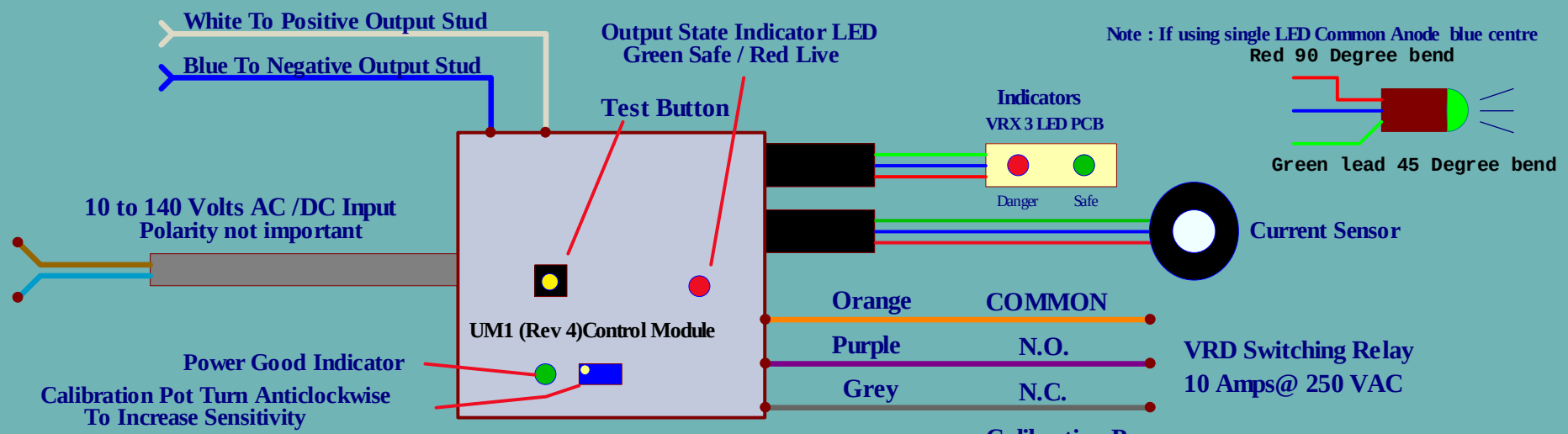

Calibration Process

To Calibrate connect a 200 Omhs 10 watt resistor to output terminals Leaving 200 Ohms in place reduce resistance to 100 Ohms by placing another 200 Ohms across output this will make a total of 100 Omhs across output terminals
If red led is on or flashing turn VRD trimmer clockwise until led turns green then turn trimmer anti cockwise until led flickers off & on remove 1 x 200 ohm resistor leaving 200 Ohms across output terminals indicator should be a constant green
Remove second 200 Ohm resistor & weld test
Test OCV ,output should be less than 35 VDC across output terminals to comply with AS 1674.2 2003 typically voltage will be around 12 VDC

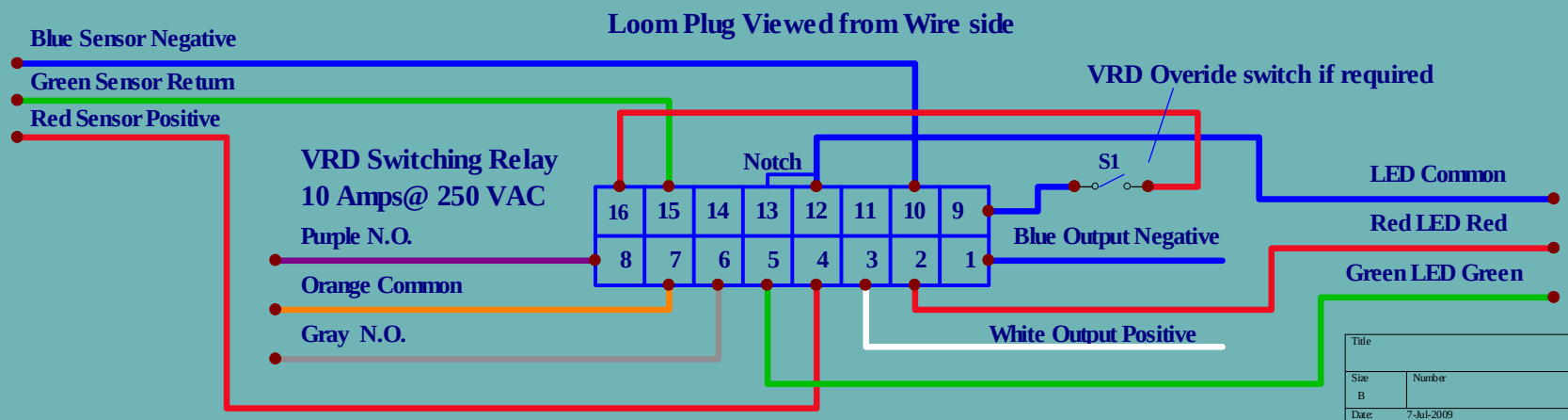

Title		
Size B	Number	Revision
Date: 7-Jul-2009		Sheet of
File: E:\SCRMICRO\BADF4D~1.DDB		Drawn By: